Regency Railing

by fiberon

Rail Installation Instructions

Prior to installing railing:
Please consult local zoning laws in regards to load requirements and bottom space requirements for rails. All supporting structures must be in accordance with applicable building codes. Neighborhood associations and/or historic districts may regulate size, type, placement and ability of railing. Apply for permits if required by local authorities and codes. Ensure compliance prior to installation. Local building code requirements will always supersede any and all suggested procedures and measurements in the following installation. The following installation instructions are intended as a general guideline based on common building practices used in railing installation.

Use existing posts or install 4 x 4 posts using the Surface Mount Bracket instructions in the pre-determined locations, cover with post sleeve and verify spacing. Posts should be plumb in both directions.
Place post sleeve base moulding over post sleeve and slide it down to the deck surface.
Measure the inside distance between posts. Transfer the measurement to the top rail, making sure that the distance from the end of the rail to the first baluster slot is equal on both ends of the rail. Ensure that all screws will fasten to the rail and none fall into the routed holes.

Note: The line bracket requires a minimum of 1-1/2 in. clearance to the first baluster hole.

Place the rails together so that the top and bottom baluster slots are aligned. Mark the bottom rail for the inside distance between the posts. Cut the top and bottom rails to fit tightly between the posts.

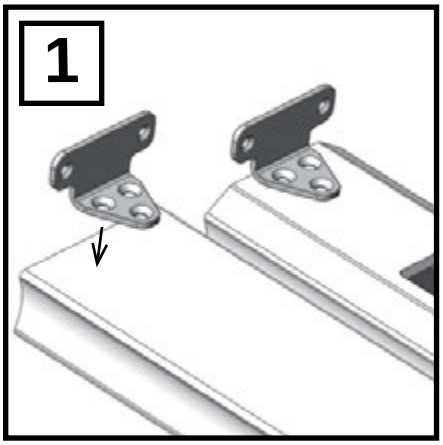

Place top and bottom rails side-by-side. Position the line brackets with the three-hole flange on the rails.

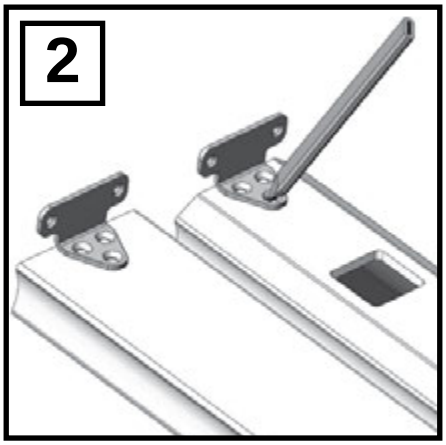

Allow 1/32 in. – 1/16 in. from the end of the rail. Mark locations of the holes.

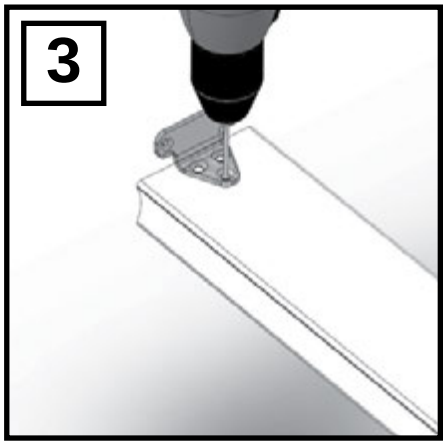

Pre-drill using a 5/32 in. bit.

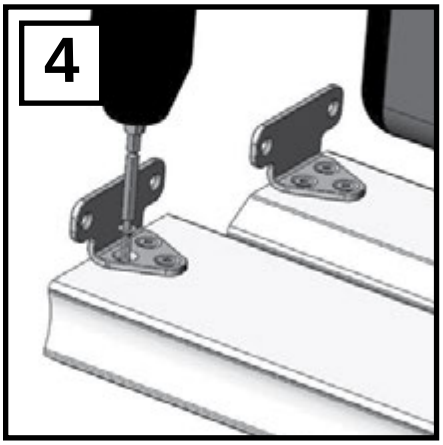

Secure with supplied #10 x 1 in. screws. Do not overtighten.

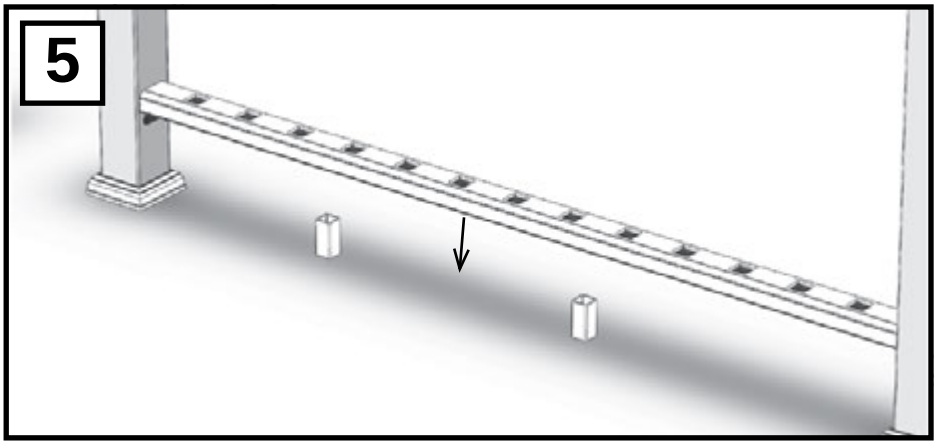

Place crush blocks or scrap material between posts to support the rail in a level position. Use one crush block for sections under 6 ft. and two crush blocks if the rail is over 6 ft. in length.

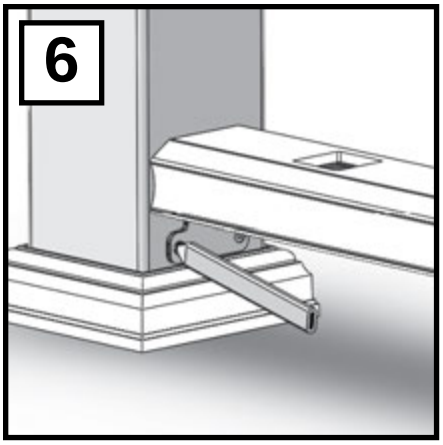

Lower the rail and mark the hole locations.

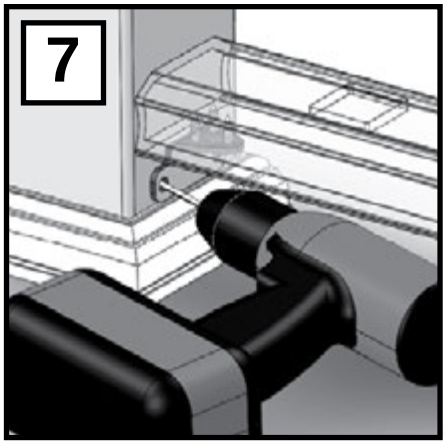

Remove the rail before pre-drilling the holes. Pre-drill the holes with a 5/32 in. bit, angling slightly upward and inward to allow for clearance from the rail once repositioned for securing (bottom rail and bracket shown for clarity).

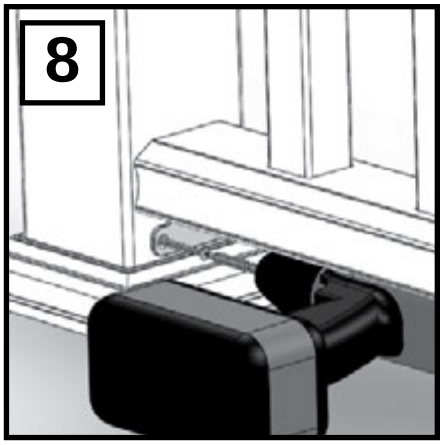

Note: Using an extended drill bit is recommended to prevent damage to the rail and allows a more perpendicular driving angle.

Reposition the rail, then secure with the supplied #10 x 2 in. screws. Do not overtighten.

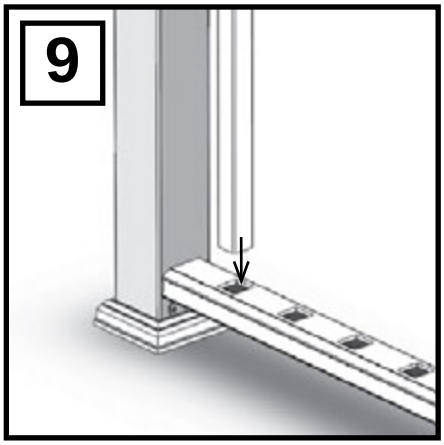

Insert a baluster into the first and last baluster holes.

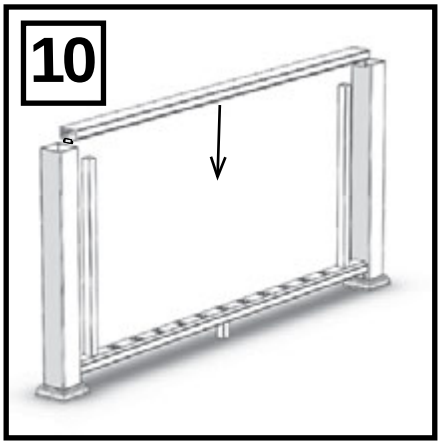

Lower the top rail with brackets over the balusters.

With the balusters fully inserted, mark the hole locations, making sure the rail is centered on the post.

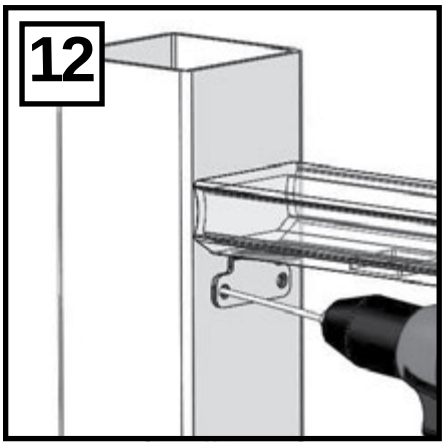

Pre-drill the holes with a 5/32 in. bit, angling slightly upward and inward to allow for clearance from the rail once repositioned for securing.

Note: Using an extended drill bit is recommended to prevent damage to the rail and allows a more perpendicular driving angle.

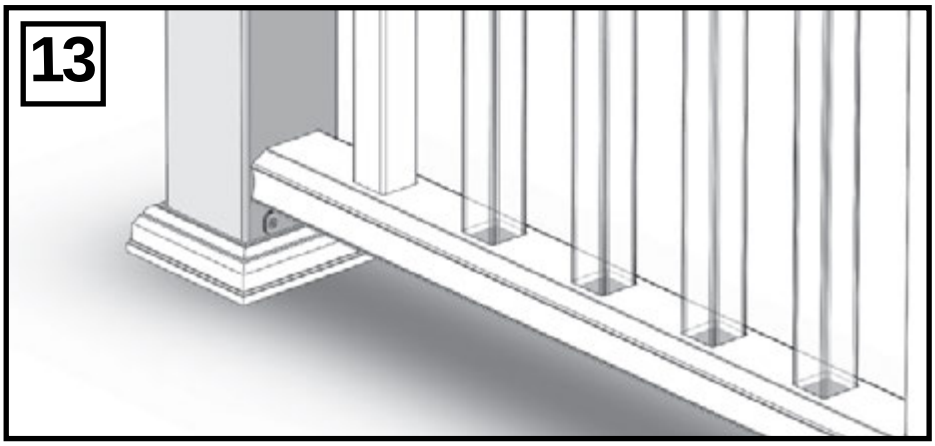

Remove the top rail and insert all the balusters into the bottom rail.

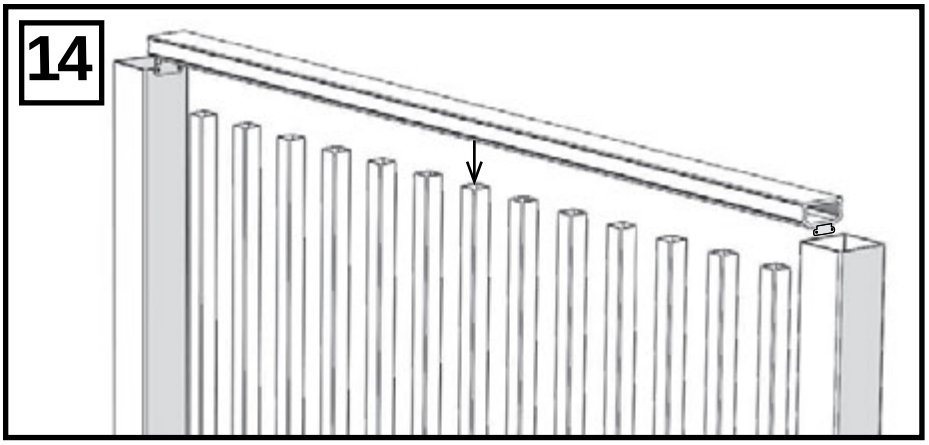

Reposition the top rail over the balusters, and lower into place between the posts.

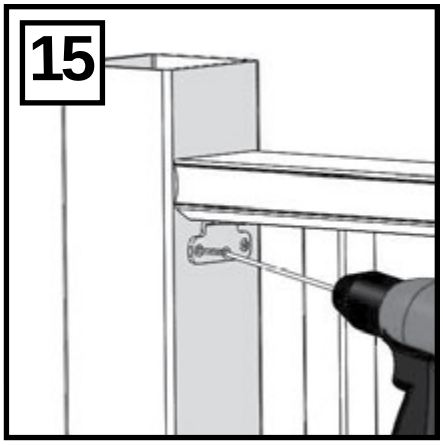

After the top rail is fully inserted, secure using the supplied #10 x 2 in. screws. Do not overtighten.

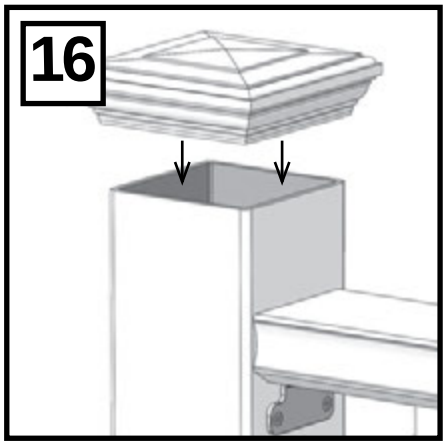

Complete the installation by gluing the post cap in place using a quality exterior adhesive.

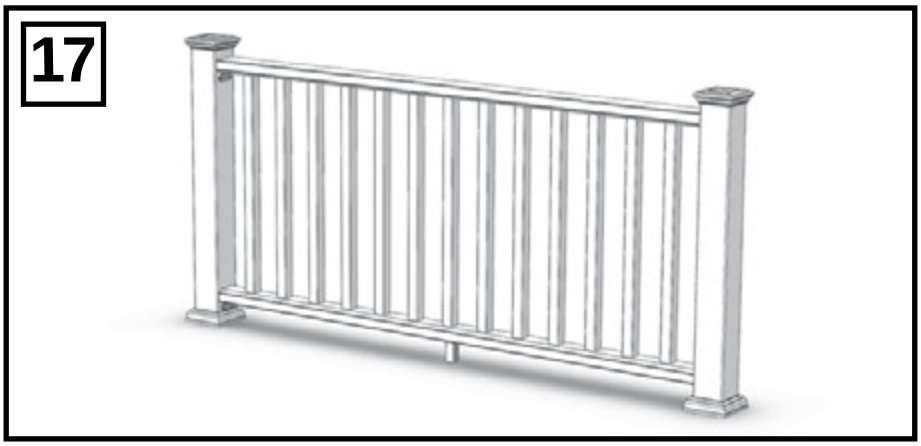

Angle Bracket Installation and Cutting Template:

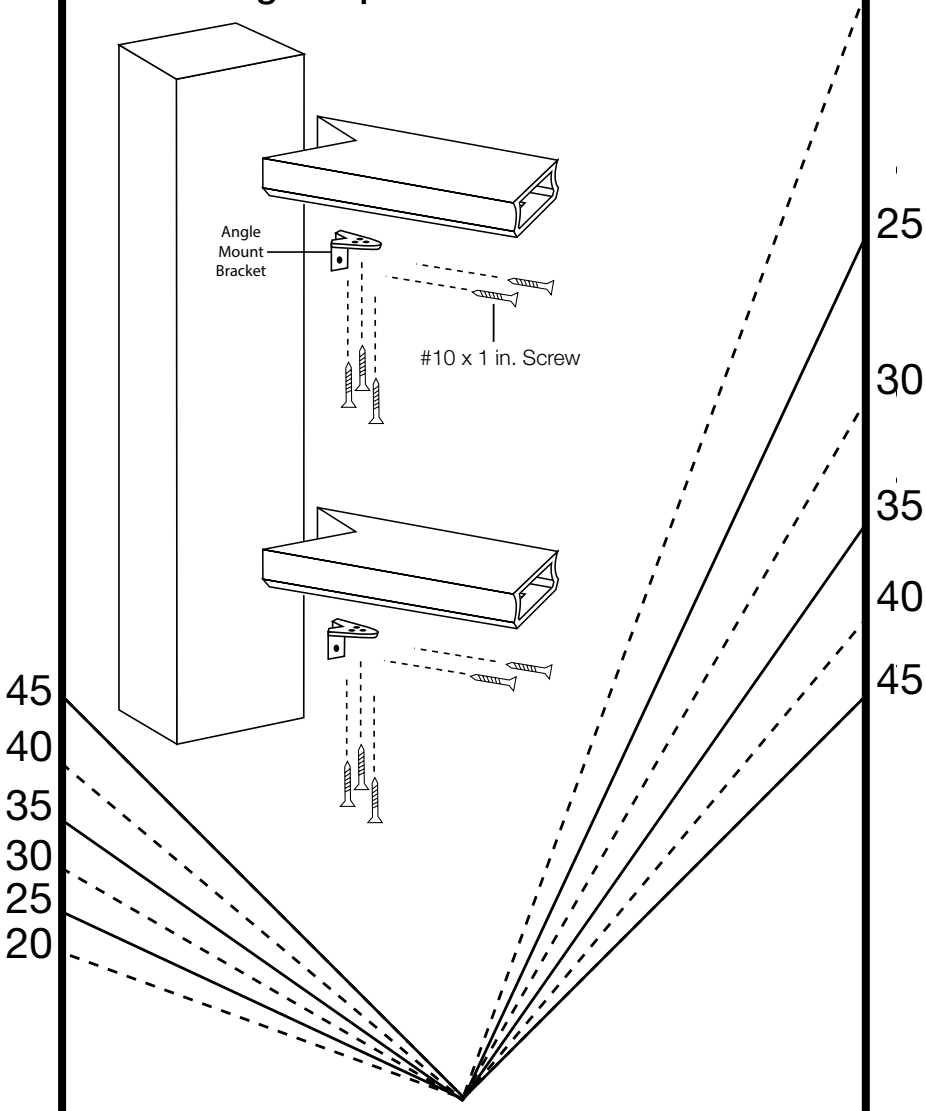

Rails up to 20˚ may be mounted to the post face by using the In-Line "L" bracket. Cut rails at the appropriate angle to fit tight against post. Cutting rails greater than 20˚ will result in a rail that does not fully fit on the post. Angles greater than 20˚ require the use of the angle bracket. (Sold separately.)

Note: The minimum distance from post corner to the first baluster hole is 2-1/4 in.

Figure 1.

1. Determine the angle of your installation by using the supplied template.
2. Cut the template out along the appropriate marked lines. (You may want to photocopy the template as a backup prior to cutting).
3. Position the template on the non-routed flat side of the top rail. Mark the proper cutting angle.
4. Position the template on the non-routed, underside surface of the bottom rail. Mark the proper cutting angle. Template will be reversed from the top rail.
5. Ensure baluster holes are equidistant from the end of rail to ensure proper vertical alignment.
6. Make angle cuts in top and bottom rails.

Figure 2

7. Align the angle brackets with the cut in the railing. Inset the bracket 1/16 in. from the rail's end. Mark the three screw hole locations on both rails. Repeat at opposite end. Pre-drill using a 5/32 in. bit and secure with supplied #10 x 1 in. screws. Do not overtighten.

Figure 3 and 4

8. After fitting angles to posts, follow the line rail instructions (Steps 5 through 16) to complete the rail section installation.

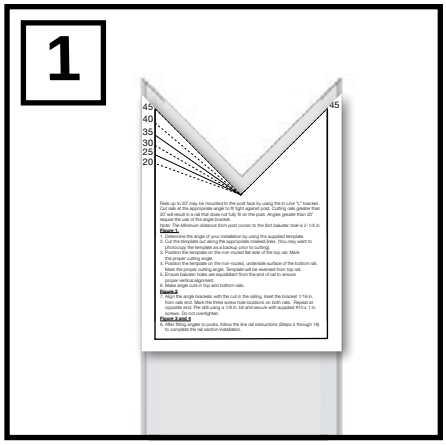

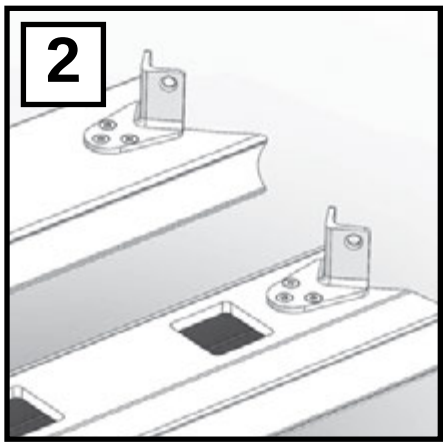

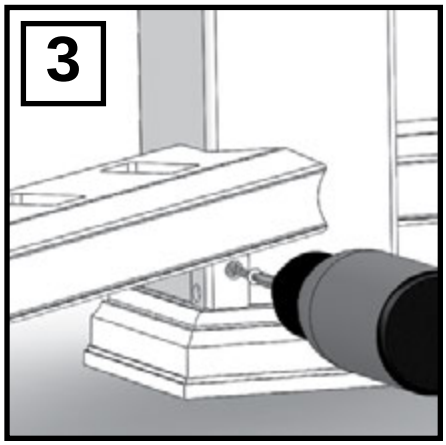

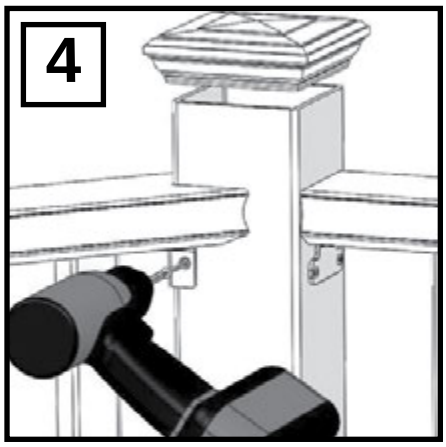

Regency Railing

by fiberon

Stair Installation Instructions

Prior to installing railing:
The stair systems are designed for the typical angles created by an approximate 7 in. rise / 11 in. run with allowance for accepted variation in components. Building codes are very specific on allowable angles and widths. It is very important to consult with your local building code officials and plan your stair layout accordingly. Ensure that you leave adequate space for graspable hand rail if applicable. “Dry fitting” intermediate post placement will result in easier and better looking installations and may avoid placement of post mounting brackets in areas where screws cannot attach to the guardrail.
All supporting structures must be in accordance with applicable building codes. Neighborhood associations and/or historic districts may regulate size, type, placement and ability of railing. Apply for permits if required by local authorities and codes. Ensure compliance prior to installation. Local building code requirements will always supersede any and all suggested procedures and measurements in the following instructions which are intended as a general guideline based on common building practices used in railing installation.

Note: The slope of the stairs can be 30 to 37 degrees.
Use existing posts or install 4 x 4 posts using the Surface Mount Bracket instructions in the pre-determined locations, cover with post sleeve and verify spacing. Posts should be plumb in both directions.
Place post sleeve base moulding over post sleeve and slide it down to the deck surface.

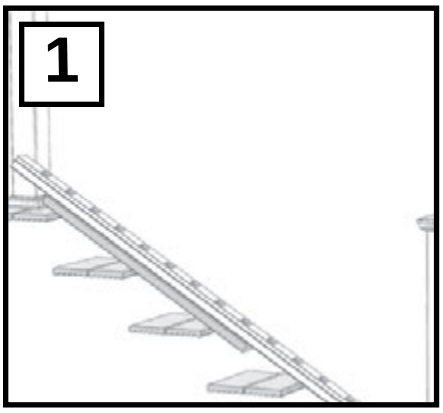

Use a 1x4 or similar support to bridge at least three stairs to establish the stair angle. Place the bottom rail between the stair posts. Center the hole pattern between the posts allowing a minimum 2-1/8 in. from rail end to routed baluster holes.

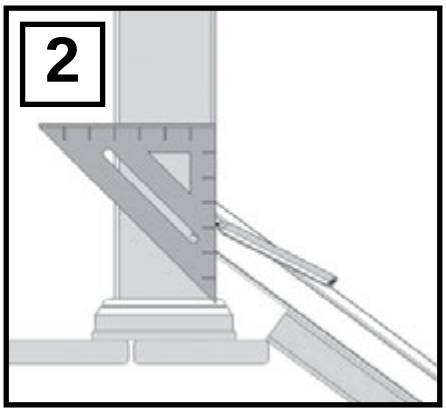

Mark the angle on the bottom rail using the inside of each post. Cut the bottom rail to required length, and check for a snug fit.

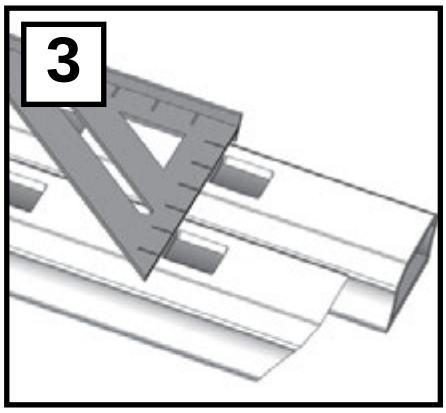

Measure the distance from the cut bottom rail end to the first hole. Transfer the dimension to the top rail, then align both rails and hole patterns together.Transfer the cut angle and cut top rail to length.

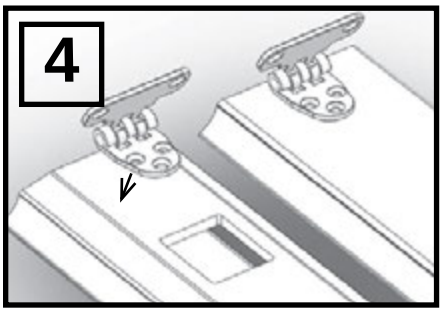

Position stair brackets onto top & bottom rails. Allow 1/32 in.-1/16 in. clearance between the bracket flange and the end of the rail.

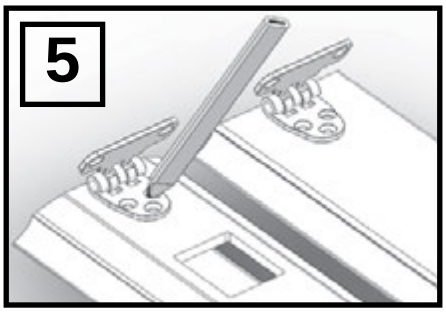

Mark the hole locations.

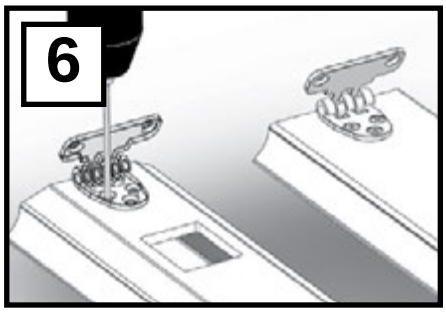

Pre-drill using a 5/32 in. bit.

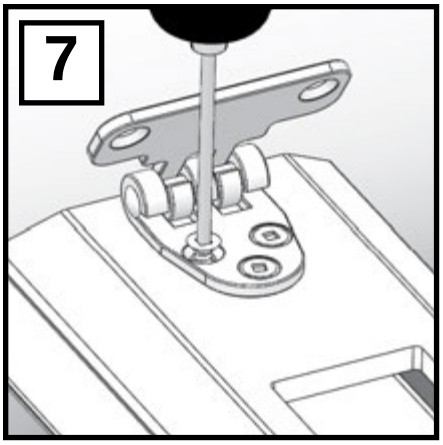

Secure with supplied #10 x 1 in. screws. Do not overtighten.

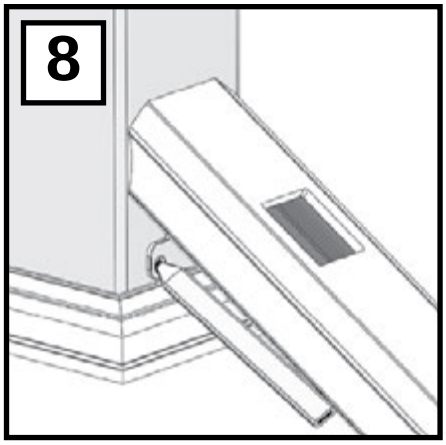

Lower the bottom rail with hinge brackets into place, and mark the hole locations.

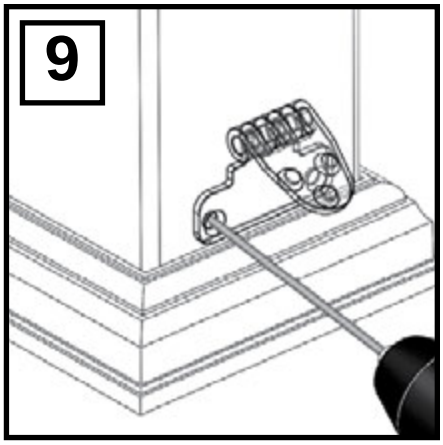

Remove the rail, and pre-drill using a 5/32 in. bit (bracket shown for clarity).
Note: Pre-drill the holes angling slightly upward and inward to allow for clearance from the rail once repositioned for securing.

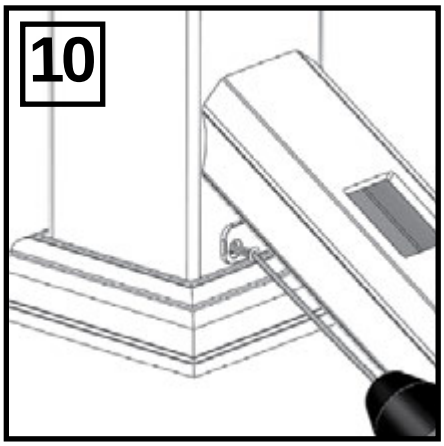

Reposition the bottom rail and secure using the supplied #10 x 2 in. screws. Do not overtighten.
Note: Using an extended drill bit is recommended to prevent damage to the rail and allows a more perpendicular driving angle.

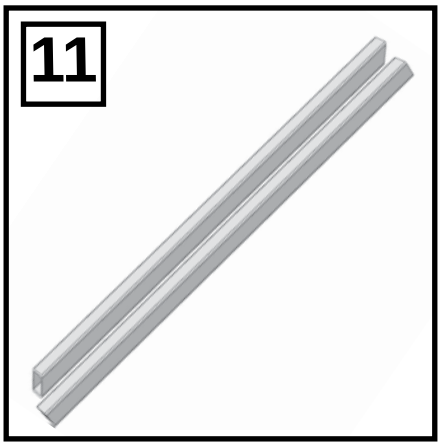

Mark the stair angle on the ends of each baluster to be used and cut at an angle on the top and bottom of each baluster. Ensure that all of the balusters are of equal length.

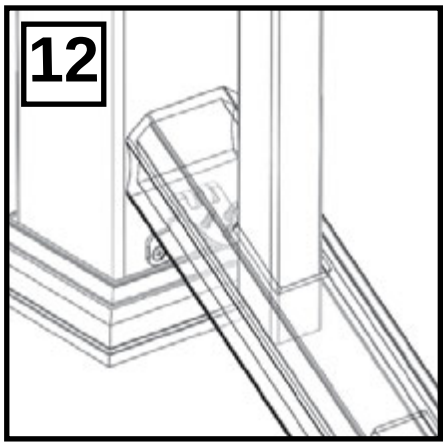

Fully insert a baluster into both the first and last holes on the bottom rail.

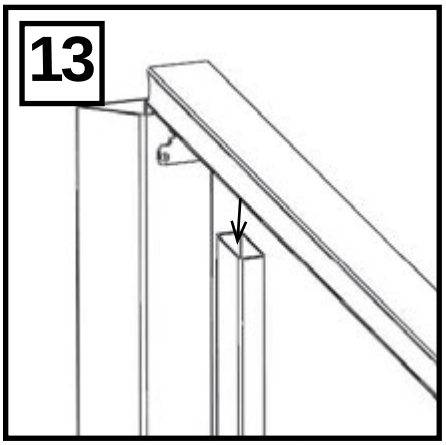

Position the top rail with brackets between the posts and lower until fully inserted into the two balusters.

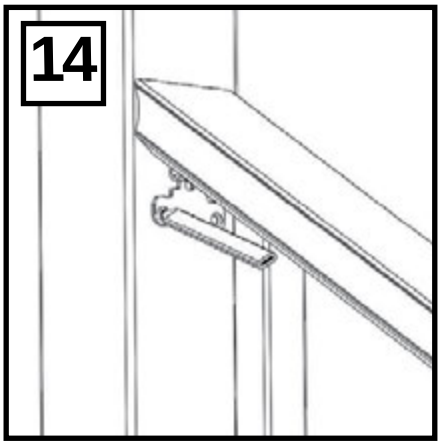

Mark the hole locations, then remove the top rail.

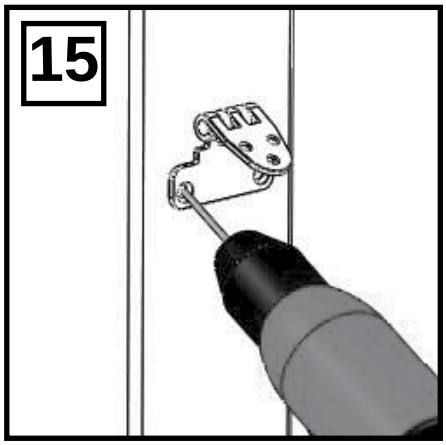

Remove the rail and pre-drill using a 5/32 in. bit. (Bracket shown for clarity.)

Note: Pre-drill the holes angling slightly upward and inward to allow for clearance from the rail once repositioned for securing.

Insert the remaining balusters, reposition the top rail over the balusters and lower into place between the posts.

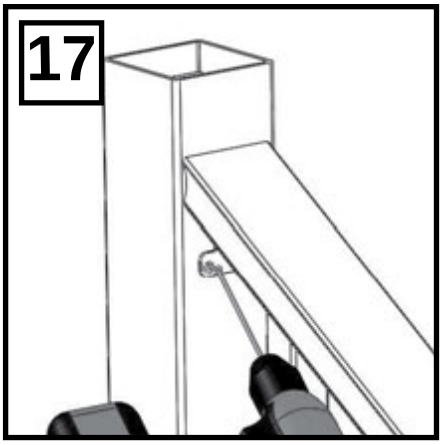

After the top rail is fully inserted, secure using the supplied #10 x 2 in. screws. Do not overtighten.

Note: Using an extended drill bit is recommended to prevent damage to the rail and allows a more perpendicular driving angle.

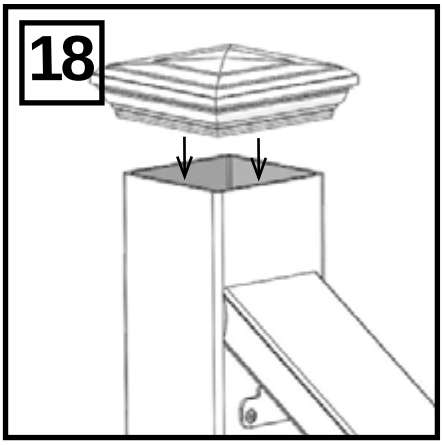

Complete the assembly by positioning and gluing the post sleeve cap in place and a crush block at the approximate mid-point of the bottom rail using a quality exterior adhesive.